CCD-IS82A/30MF

Features:

-1/3" SONY Super HAD CCD

-Resolution: 420TVL

-Water proof IP66

Specifications:

MODEL	CCD-IS82A/30MF
Pick-up device	1/3"SONY Super HAD CCD
Number of pixels	PAL:500(H)*582(V)
Sensing area	4.9mm*3.7mm
Lens	4-9mm manual Lens
View angle	98°-38°
Sync System	Internal
Resolution	420 TVL
Minimum illumination	Color 0.5Lux/F1.2, B/W 0.05Lux/F1.2, 0Lux (IR on)
S/N ratio	More than 48dB
Supply voltage	DC12V
Gamma modification	0.45
Gain control	Auto
White balance	Auto
Electronic shutter	1/60(1/50)~1/100,000 sec
Video output	1.0Vp-p Composite Video Output,75ohm
IR distance	20~30m
Power consumption	DC12V:200mA, IR ON/500mA
Operation temp.	-20℃to 50℃
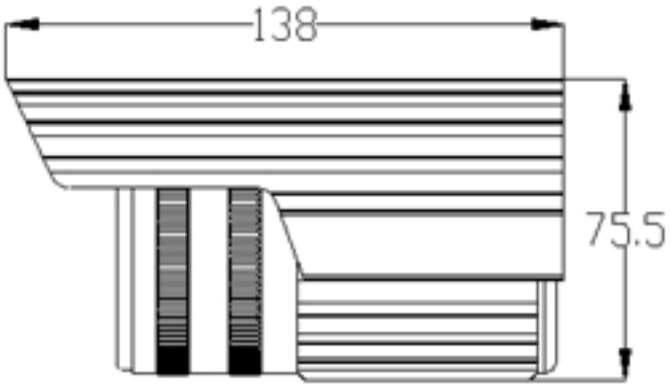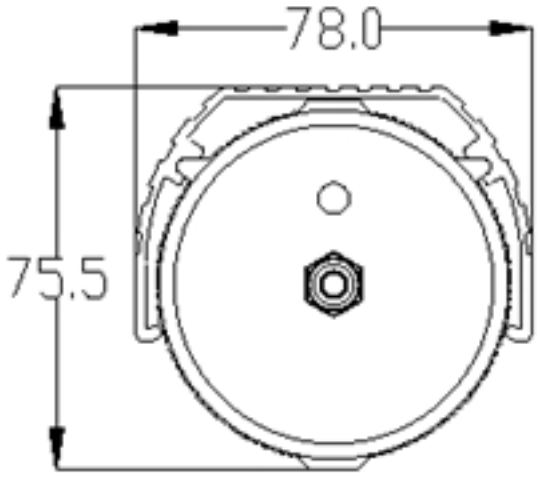
Dimension: